CATERPILLAR

D353
MARINE ENGINE

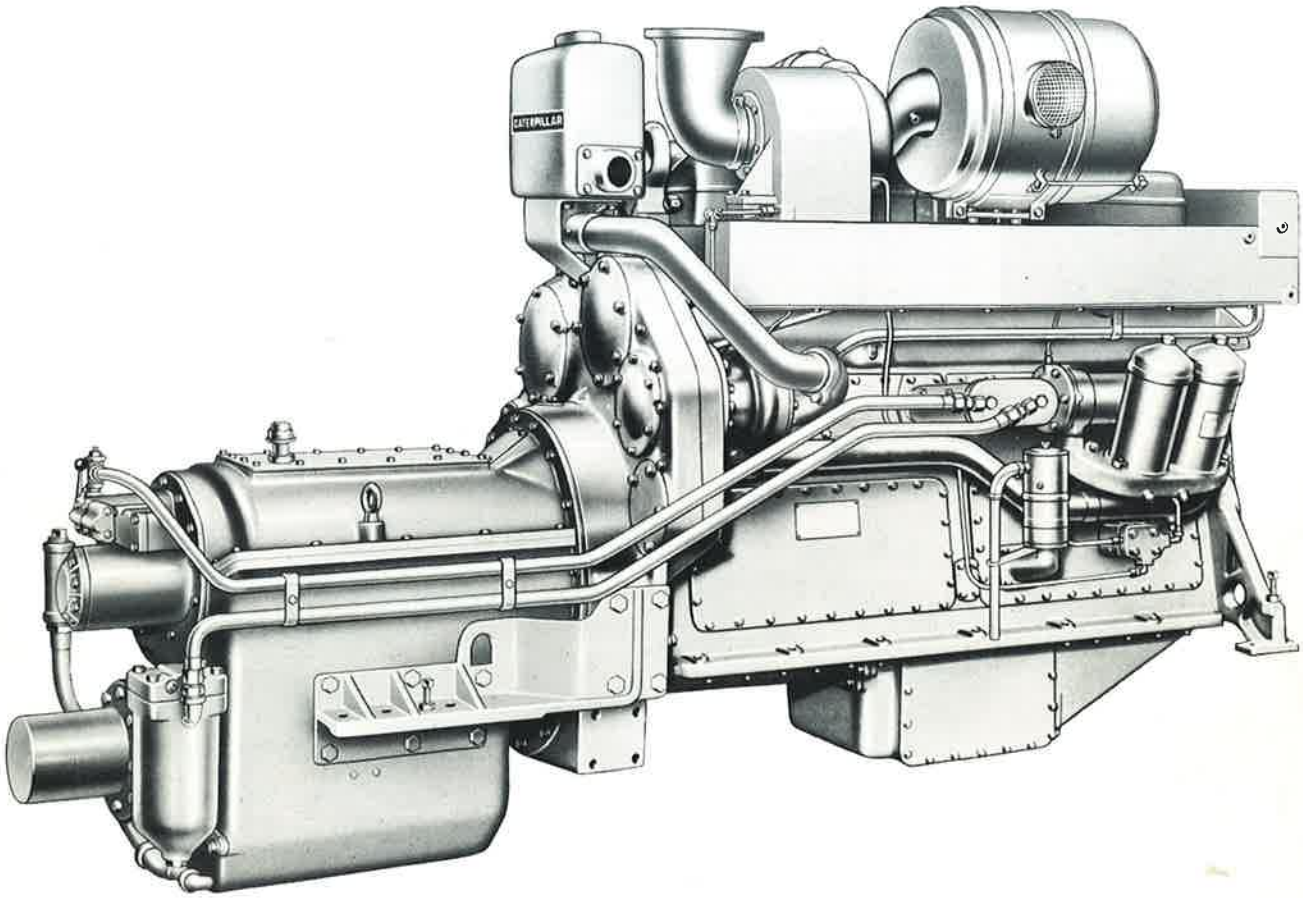

MARINE ENGINE

		TA 85°F(30°C) Water to A/C
Maximum (Flywheel) @ 1300 RPM	BHP HP (metric)	640 649
Intermittent (Flywheel) @ 1300 RPM	BHP HP (metric)	535 542
Continuous (Flywheel) @ 1225 RPM	BHP HP (metric)	425 431
Continuous (Shaft) @ 1225 RPM	BHP HP (metric)	412 418
Approx. Fuel Consumption @ Full Cont. Shaft HP	Gal/Hr Lit/Hr	22.7 86.1

*For Maximum & Intermittent Applications, consult Factory.

DESCRIPTION

Four stroke cycle, Diesel

Number of cylinders	In-Line 6	
Bore and stroke: inches	6.25 x 8.00	
millimeters	159 x 203	
Displacement: cu. in.	1473	
liters	24,2	
Low idle speed	475 RPM	
Engine Rotation	SAE Standard	
Approximate dry weight	lb	kg
Engine	6670	3030
Marine gear	2350	1065
Total	9020	4095